RAYTOOLS

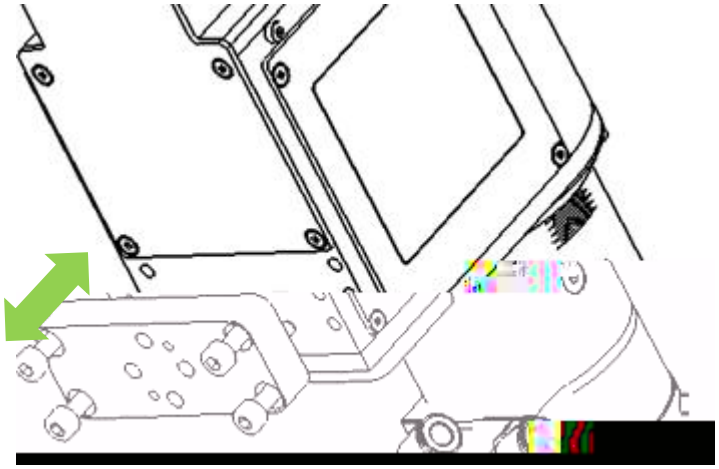

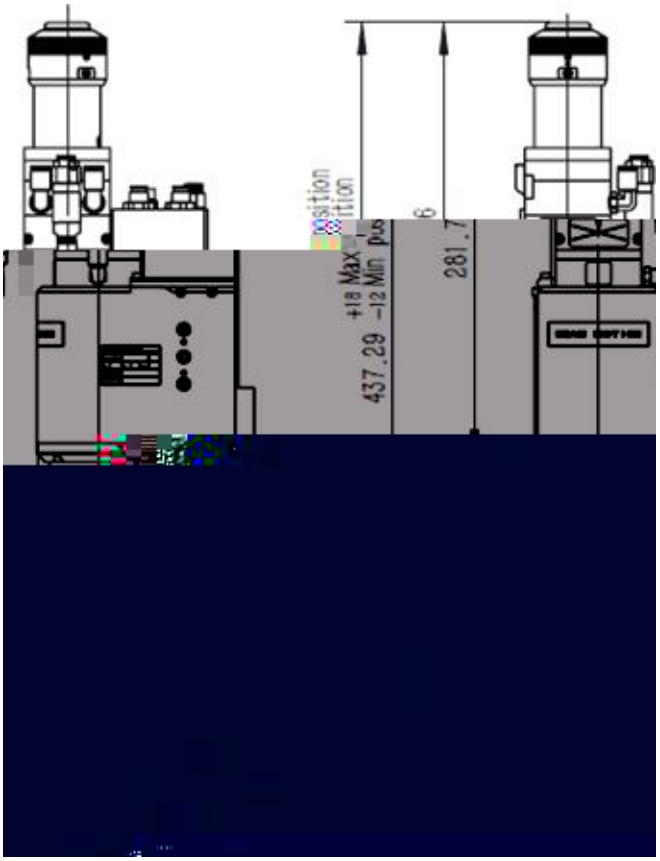
437.29
+18 Max
−12 Min
281.7
6

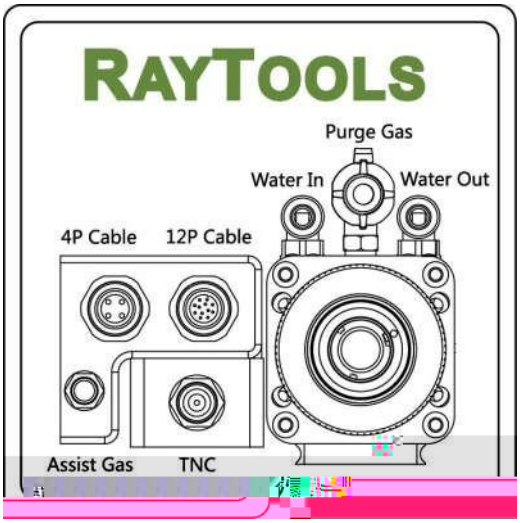
RAYTOOLS
Purge Gas
Water In
Water Out
4P Cable
12P Cable
Assist Gas
TNC

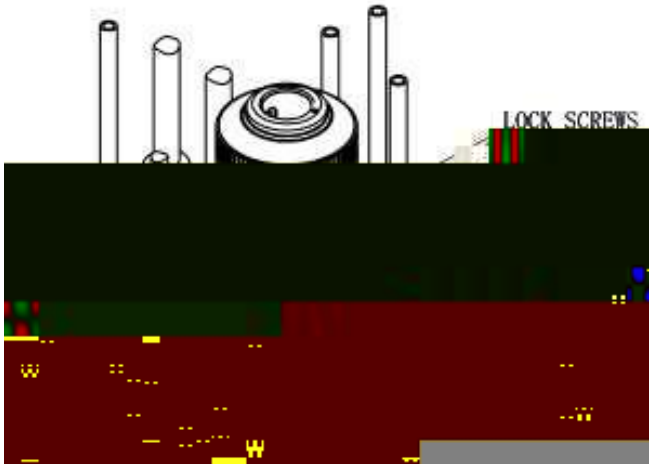
LOCK SCREWS

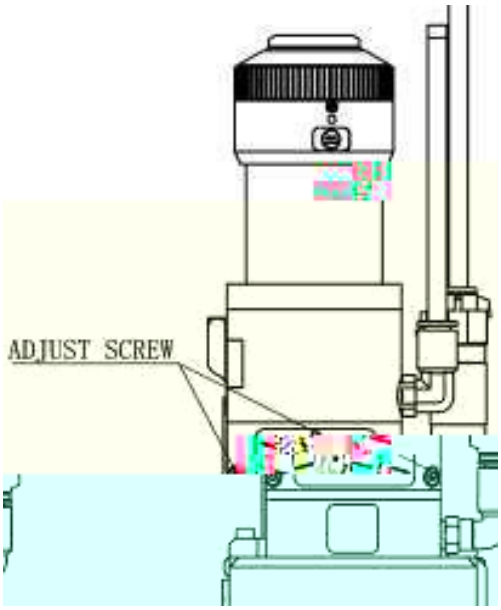
ADJUST SCREW

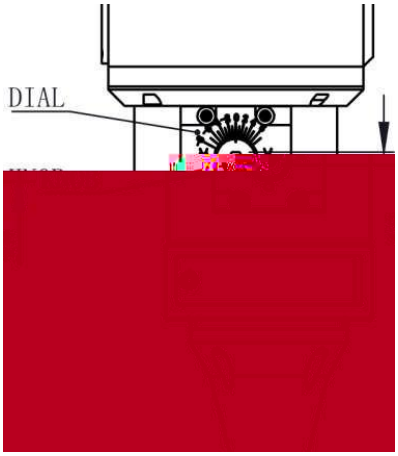
DIAL

An ɟhą

Po‹B ! €Ð5P ŠƵ

Po‹U ‰Œ

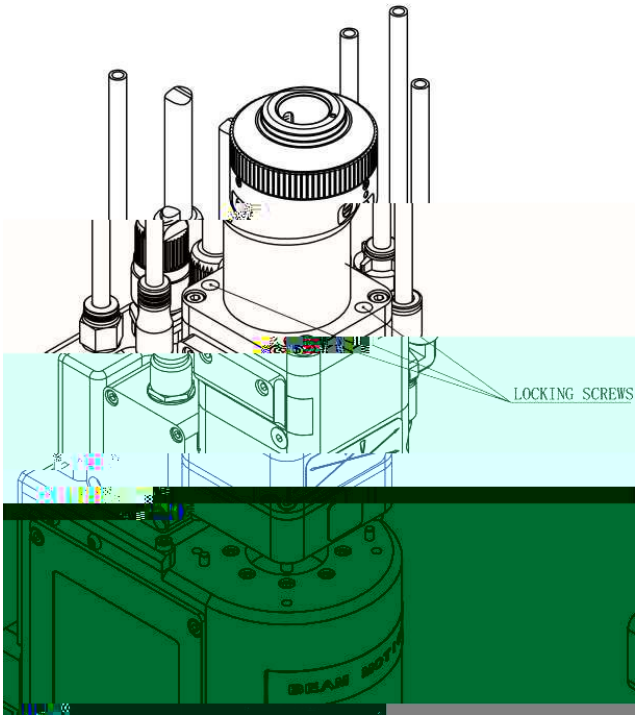
LOCKING SCREWS